ARCH E1 30"x42"
Approved:
Checked:
Designer:
Project Management Initials:

Building Inspection Division
Lakeland
THESE PLANS HAVE BEEN REVIEWED FOR COMPLIANCE WITH THE CURRENT EDITION OF THE FLORIDA BUILDING CODE
Date: 11/15/19
Permit Number: BLD19-06035

GENERAL NOTES:

1. Irrigation system design requirements: 45 GPM @ a minimum of 65 PSI Static at the point of connection. The irrigation Contractor shall verify the available GPM and PSI prior to installation of the system.
2. Do not willfully install the irrigation as shown on the drawings when it is obvious in the field that conditions exist that might not have been considered in the design process. For example: obstructions, grade differences, water levels dimensional differences, etc. Refer to the landscape plan to avoid conflicts with proposed trees or shrubs.
3. Piping may sometimes be indicated as being located in unlikely areas: i.e., under buildings, outside property lines, under pavement, in lakes or ditches, etc. This is done for graphic clarity only. Whenever possible, piping is to be installed in open, green areas.
4. Pipe sizes shall conform to those on the drawing. Substituting with smaller pipe sizes will not be permitted.
5. If required the Irrigation Contractor shall provide the necessary Right of Way use permits.
6. Mainline to be installed with a minimum of 18" depth of cover, lateral lines are to be installed with a minimum of 12" depth of cover.
7. Unless otherwise indicated all sleeves are to be PVC Sch 40 and at least two (2) nominal sizes larger than the pipe to be sleeved.
8. Wherever practical, install valves out of high traffic areas. All valves, flush valves and wire splices shall be installed in Carson valve boxes as follows: Remote control valves in 12" standard rectangular box, wire splices in 10" round valve box, flush valves in 6" round valve box and drip control zone kits in Jumbo valve boxes.
9. All 24 volt control wire to be UL listed 14 Gauge single strand with White being the common wire.
10. All wire connections to be King sealed wire Connectors.
11. All grounding as per Hunter Industries requirements.
12. All pop up sprinkler heads shall be installed level and flush to grade. Mount all sprays on 18" of flexible PVC. Mount all rotor heads on PVC swing joints.
13. Install all heads a minimum of 12" from any structures.
14. Location of all sprinkler heads shall be site adjusted to minimize water overthrow onto building surfaces and walkways. Use pressure regulators on valves, if needed to prevent fogging.
15. Install drip tubing at grade before mulching. Typical spacing for drip tubing is 12"-18" on center. Spacing to be determined by plant layout. Refer to the landscape plan.Install flush valves at all tubing dead ends. install air/vacuum relief valves at high points of every section. Stake tubing every 5' with 12" plastic stakes
16. The rain shut off device shall be installed to meet local codes and/or minimum manufacturer's recommendations.
17. Main line piping larger than 2" shall have thrust blocks sized and placed in accordance with the manufacturer's recommendations. Thrust blocks shall be standard poured concrete mix. Thrust blocks shall be installed at all changes in directions, reducers, valves and end caps of main line.
18. The irrigation contractor shall prepare an AS-BUILT drawing on reproducible paper showing all main line piping, control wires and valves by showing exact measurements from hard surfaces.
19. The owner will supply power to the irrigation controller and pump station.
20. Any other equipment required that is not otherwise detailed or specified shall be installed as per manufacturer's recommendations and specifications.
21. Velocity not to exceed 5' per second.

IRRIGATION SCHEDULE

SYMBOL	MANUFACTURER/MODEL/DESCRIPTION	QTY
LST RST SST	Hunter MP Strip PROS-06-PRS40-CV-F Turf Rotator, 6" pop-up with factory installed check valve, flloguard, pressure regulated to 40 psi, MP Rotator nozzle on PRS40 body. LST=Ivory left strip, SST=Brown side strip, RST=Copper right strip.	2
K G R	Hunter MP2000 PROS-06-PRS40-CV-F Turf Rotator, 6" pop-up with factory installed check valve, flloguard, pressure regulated to 40 psi, MP Rotator nozzle on PRS40 body. K=Black adj arc 90-210, G=Green adj arc 210-270, R=Red 360 arc.	38
B Y A	Hunter MP3000 PROS-06-PRS40-CV-F Turf Rotator, 6" pop-up with factory installed check valve, flloguard, pressure regulated to 40 psi, MP Rotator nozzle on PRS40 body. B=Blue adj arc 90-210, Y=Yellow adj arc 210-270, A=Gray 360 arc.	86
25 50 TO 20	Hunter PCB Flood Bubbler, 1/2" FIPT.	202
SYMBOL	MANUFACTURER/MODEL/DESCRIPTION	QTY
	Hunter ICZ-151-40 Drip Control Zone Kit. 1-1/2" ICV Globe Valve with 1" HY100 filter system. Pressure Regulation: 40psi. Flow Range: 20 GPM to 60 GPM. 120 mesh stainless steel screen. 1-1/2" inlet x dual 1" outlets	3
	Pipe Transition Point above grade Pipe transition point from PVC lateral to drip tubing with riser to above grade installation.	15
	Area to Receive Dripline Hunter HDL-09-12-PC HDL-09-12-PC: Hunter Dripline with 0.9 GPH flow. Light brown tubing with black striping. Emitters at 12" O.C. Dripline laterals spaced at 12" apart, with emitters offset for triangular pattern. Install with Hunter PLD barbed or PLD-LOC fittings.	4,696 l.f.
SYMBOL	MANUFACTURER/MODEL/DESCRIPTION	QTY
	Hunter ICV-G 1", 1-1/2", 2", and 3" Plastic Electric Remote Control Valves, Globe Configuration, with NPT Threaded Inlet/Outlet, for Commercial/Municipal Use.	7
C	Hunter I2C-0800-PL 8 Station Outdoor Modular Controller. No Module Required. Commercial Use. Plastic Cabinet.	1
S	Hunter WRF-CLIK Rain/freeze Sensor, install within 1000 ft of controller, in line of sight. 22-28 VAC/VDC 100 mA power from timer transformer. Mount as noted. Includes Gutter Mount.	1
F	Hunter HY-151 1 1/2" MPT threaded inlet and outlet filter with 150 mesh stainless steel screen.	5
BF	Backflow Preventer Check Local Codes for Exact Specifications	1
W	5" Deep Well with Pump station with VFD	1
	Irrigation Lateral Line: PVC Class 200 SDR 21	7,604 l.f.
	Irrigation Mainline: PVC Schedule 40	1,603 l.f.
	Pipe Sleeve: PVC Schedule 40	1,605 l.f.

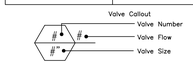

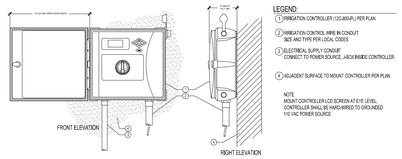

1 ICC2 CONTROLLER
NTS — 32 8432-03

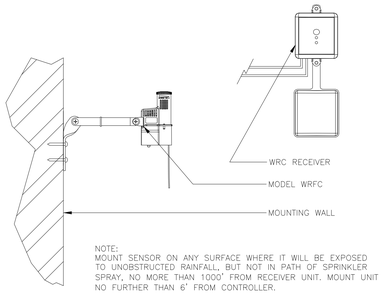

2 WIRELESS RAIN/FREEZE-CLIK
3" = 1'-0" — FX-IR-HUNT-SENS-18

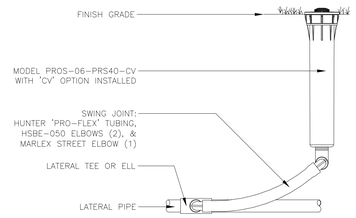

3 PROS-06-PRS40-CV MP ROTATOR SPRINKLER (4)
3" = 1'-0" — FX-IR-HUNT-SPRA-80

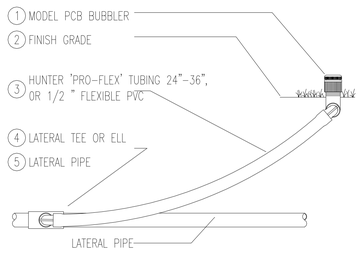

4 HUNTER PCB BUBBLER
1" = 20" — NTS

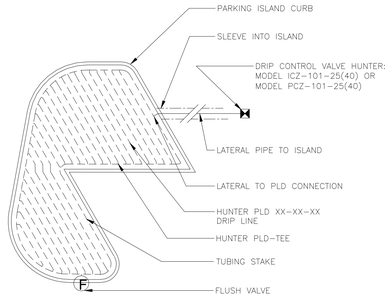

5 IRREGULAR ISLAND A
1" = 1'-0" — FX-IR-HUNT-MICR-19

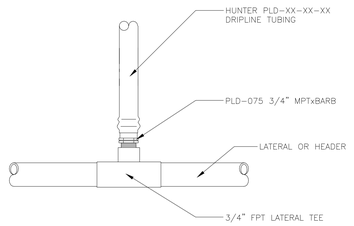

6 START CONNECTION ABOVE GRADE
1 1/2" = 1'-0" — FX-IR-HUNT-MICR-11

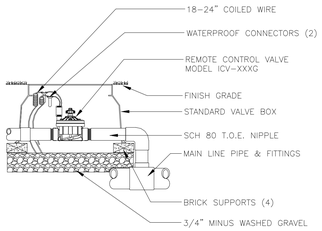

7 ICV GLOBE VALVE
1" = 1'-0" — FX-IR-HUNT-VALV-20

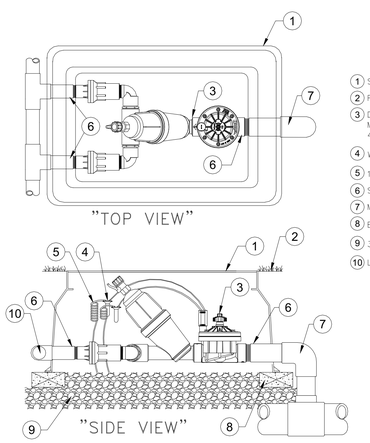

1 SUPER JUMBO VALVE BOX
2 FINISH GRADE
3 DRIP ZONE KIT MODEL ICZ-151-40 WITH FILTER (TIP 45 DEGREES) REGULATOR 40 PSI
4 WATERPROOF CONNECTORS (2)
5 18-24" COILED WIRE
6 SCH 80 T.O.E. NIPPLE
7 MAIN LINE PIPE & FITTINGS
8 BRICK SUPPORTS (7)
9 3/4" MINUS WASHED GRAVEL
10 LATERAL PIPE AND FITTINGS

8 ICZ-151-40 DRIP CONTROL KIT
1 1/2" = 1'-0" — FX-IR-HUNT-DRIP-20

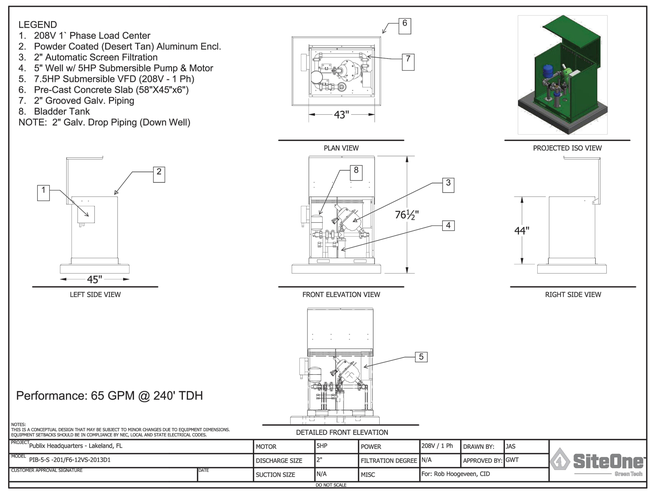

9 PUMP STATION PACKAGE

AECOM
BATSON-COOK CONSTRUCTION

PROJECT

PUBLIX HEADQUARTERS BUILDING ADDITION AND PARKING LOT EXPANSION

3300 PUBLIX CORPORATE PARKWAY
LAKELAND, FL 33811

CLIENT

Publix

3300 PUBLIX CORPORATE PARKWAY
LAKELAND, FL 33811

www.publix.com

CONSULTANT

AECOM

AECOM TECHNICAL SERVICES, INC.
800 Douglas Entrance
North Tower, 2nd Floor
Coral Gables, FL 33134
305.444.4691 tel 305.447.3580 fax
www.aecom.com

ARCHITECTURE
LICENSE NO. AA26000687

ENGINEERING
CA LIC. NO. 8115

www.aecom.com

REGISTRATION

NICHOLAS A. MYERS LICENSE LA 6667226 STATE OF FLORIDA LANDSCAPE ARCHITECT

Nicholas A Myers
Digitally signed by Nicholas A Myers
Date: 2019.08.23 09:15:42 -04'00'

NICHOLAS A. MYERS, RLA

LANDSCAPE ARCHITECT OF RECORD

THE OFFICIAL RECORD OF THIS SHEET IS THE ELECTRONIC FILE DIGITALLY SIGNED AND SEALED UNDER RULE 61G10-11.011, F.A.C.

ISSUE/REVISION

I/R	DATE	DESCRIPTION
0	AUG 23, 2019	CONSTRUCTION DOCUMENTS

PROJECT NUMBER

60601397

SHEET TITLE

IRRIGATION NOTES, LEGEND, AND DETAILS

SHEET NUMBER

IR-001

Last Printed: 8/21/2019 3:16:05 PM
Filename: S:\PROJECTS_CIVIL\PROJECTS\PUBLIX\900-DIV\DG\900-CAD_BIM (CIVIL)\20-SHEETS\LIR-100 IRRIGATION PLAN.DWG
Printed on ___% Post-Consumer Recycled Content Paper
©2016 AECOM Corporation